DATASHEET AMS 6835 SERIES

Miniature Board Mount Pressure Sensor with Digital I2C Output

FEATURES

- **Ultra-small board mount pressure sensor series with digital output via I2C interface: 24 bit values for pressure and temperature**
- **Pressure ranges from ultra-low pressure of 1.25 mbar (125 Pa) up to 2 bar**
- **Differential/relative, bidirectional differential, absolute and barometric sensor versions**
- **Piezoresistive sensor with high precision digital signal conditioning**
- **Calibrated and temperature compensated**
- **Total accuracy at room temperature: < 0.5 %FSO (pressure range 0 to 10 mbar)**
- **Total error band (-25 … 85 °C): < 1 %FSO (pressure range 0 to 10 mbar)**
- **High long-term stability**
- **Fast response time: < 1 ms in update mode @ 16 bit resolution < 4 ms in sleep mode @ 18 bit resolution**
- **Sleep mode for low-power applications (e.g. battery applications)**
- **Supply voltage of 3.3 V or 5 V for update mode types and 3.3 V for sleep mode types**
- **Programmable I2C-address**
- **Extremely compact ceramic DIP-6 package (width: 0.43 inch)**
- **RoHS compliant**

TYPICAL APPLICATIONS

- Medical instrumentation
- HVAC (Heating, Ventilation, Air Conditioning)
- Building automation
- Gas and air flow measurement
- Safety-critical applications
- Air speed measurement
- Barometric altitude measurement
- Vacuum control
- Battery powered applications

GENERAL DESCRIPTION

The OEM pressure sensors in the AMS 6835 series with digital I2C interface are high-precision board mount sensors in an extremely compact DIP-6 package. The I2C output and the 3.3 V and 5 V types make AMS 6835 pressure sensors ideal for microcontroller applications.

The sensors are extensively calibrated, linearized and temperature compensated in a wide temperature range of -25 … 85 °C. As a result, high accuracy at room temperature and a very small total error band in the complete temperature range are achieved. Due to the membrane-based measurement principle, the AMS 6835 sensors are gas-tight and offer complete media separation.

The sensors in the AMS 6835 series are available in various pressure ranges for all pressure types:

differential (relative) pressure sensors in ranges from 0 to 2.5 mbar up to 0 to 2 bar,

bidirectional differential pressure sensors (positive and negative pressure) from -1.25 to +1.25 mbar up to -1 to +1 bar,

absolute pressure sensors from 0 to 500 mbar up to 0 to 2 bar and

a barometric pressure sensor with a pressure range from 700 to 1200 mbar.

AMS 6835 can be ordered in two different configurations: a fast update mode with 1 kHz measurement rate and 16 bit resolution or a sleep mode with 18 bit resolution for battery-powered applications.

Further modifications or customized pressure ranges are available on request.

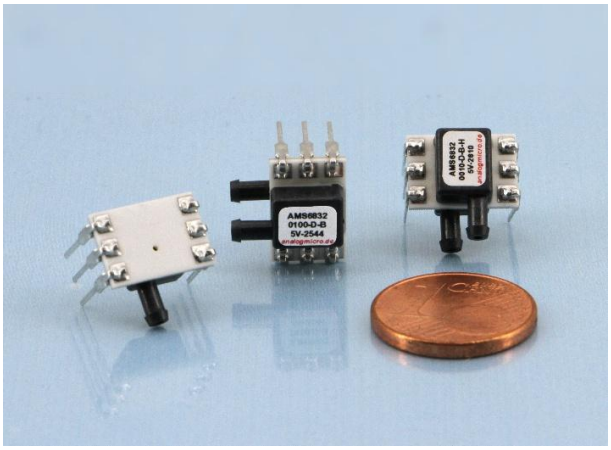

© 2026, Analog Microelectronics GmbH, An der Fahrt 13, 55124 Mainz, Germany; Tel.: +49 (0)6131/91073-0; Fax: +49 (0)6131/91073-30; E-Mail: info@analogmicro.de

PRESSURE RANGES

Sensor type (code)	Pressure type	Pressure range in mbar	Burst pressure[1] in bar	Pressure range in Pa	Burst pressure in kPa
Ultra-low pressure ranges					
AMS 6835-0002-D-…	differential / relative[2]	0 … 2.5	> 0.2	0 … 250	> 20
AMS 6835-0005-D-…	differential / relative	0 … 5	> 0.2	0 ... 500	> 20
AMS 6835-0010-D-…	differential / relative	0 … 10	> 0.2	0 ... 1000	> 20
AMS 6835-0012-D-…	differential / relative	0 … 12.5	> 0.2	0 ... 1250	> 20
AMS 6835-0001-D-B-…	bidirectional differential	-1.25 … 1.25	> 0.2	-125 … 125	> 20
AMS 6835-0002-D-B-…	bidirectional differential	-2.5 ... +2.5	> 0.2	-250 ... +250	> 20
AMS 6835-0005-D-B-…	bidirectional differential	-5 … +5	> 0.2	-500 ... +500	> 20
AMS 6835-0010-D-B-…	bidirectional differential	-10 … +10	> 0.2	-1000 ... +1000	> 20
AMS 6835-0012-D-B-…	bidirectional differential	-12.5 … +12.5	> 0.2	-1250 ... +1250	> 20
Low pressure ranges					
AMS 6835-0020-D-…	differential / relative	0 … 20	> 0.4	0 ... 2000	> 40
AMS 6835-0035-D-…	differential / relative	0 … 35	> 0.4	0 ... 3500	> 40
AMS 6835-0050-D-…	differential / relative	0 … 50	> 1	0 ... 5000	> 100
AMS 6835-0100-D-…	differential / relative	0 … 100	> 1	0 ... 10000	> 100
AMS 6835-0020-D-B-…	bidirectional differential	-20 … +20	> 0.4	-2000 ... +2000	> 40
AMS 6835-0035-D-B-…	bidirectional differential	-35 … +35	> 0.4	-3500 ... +3500	> 40
AMS 6835-0050-D-B-…	bidirectional differential	-50 … +50	> 1	-5000 ... +5000	> 100
AMS 6835-0100-D-B-…	bidirectional differential	-100 … +100	> 1	-10000 ... 10000	> 100
Standard pressure ranges					
AMS 6835-0200-D-…	differential / relative	0 … 200	> 1.7	0 ... 20000	> 170
AMS 6835-0350-D-…	differential / relative	0 … 350	> 5	0 ... 35000	> 500
AMS 6835-0500-D-…	differential / relative	0 … 500	> 5	0 ... 50000	> 500
AMS 6835-1000-D-…	differential / relative	0 … 1000	> 5	0 ... 100000	> 500
AMS 6835-2000-D-…	differential / relative	0 … 2000	> 5	0 ... 100000	> 500
AMS 6835-0200-D-B-…	bidirectional differential	-200 … +200	> 1.7	-20000 ... +20000	> 170
AMS 6835-0350-D-B-…	bidirectional differential	-350 … +350	> 5	-35000 ... +35000	> 500
AMS 6835-0500-D-B-…	bidirectional differential	-500 … +500	> 5	-50000 ... +50000	> 500
AMS 6835-1000-D-B-…	bidirectional differential	-1000 … +1000	> 5	-100000 ...100000	> 500
AMS 6835-0500-A-…	absolute	0 … 500	> 5	0 ... 50000	> 500
AMS 6835-1000-A-…	absolute	0 … 1000	> 5	0 ... 100000	> 500
AMS 6835-1500-A-…	absolute	0 … 1500	> 5	0 ... 150000	> 500
AMS 6835-2000-A-…	absolute	0 … 2000	> 5	0 ... 200000	> 500
AMS 6835-1200-B-…	absolute (barometric)	700 … 1200	> 5	0 ... 200000	> 500

Table 1: **AMS 6835 standard pressure ranges (other pressure ranges on request)**

Notes:

1) Burst pressure is defined as the maximum pressure which may be applied to one pressure port relative to the other port (or while only one pressure port is connected) without causing leaks in the sensor.

2) Relative pressure is the difference between applied pressure and atmospheric pressure. It is often also called gage or gauge pressure.

© 2026, Analog Microelectronics GmbH

MAXIMUM RATINGS

Parameter	Minimum	Typical	Maximum	Units
Maximum supply voltage: $V_{S,max}$			6.5	V
Operating temperature: T_{op}	-25		85	°C
Storage temperature: T_{amb}	-40		125	°C
Common mode pressure: p_{CM}[1)]			8	bar

Table 2: **Maximum ratings**

Note:

1) Maximum common mode pressure is defined as the maximum pressure, which can be applied simultaneously on both pressure ports without causing damages, while no differential pressure is applied.

SPECIFICATIONS

All parameters apply V_S = 3.3 V (3.3 V models) or V_S = 5.0 V (5 V models), p_{CM} = *0* mbar and T_{op} = *25* °C, unless otherwise stated.

Parameter	Minimum	Typical	Maximum	Units
Digital output signal (pressure)[1)]				
@ specified minimum pressure (see "pressure range")[2)]		$0.1 \cdot 2^{24}$		counts
@ specified maximum pressure (see "pressure range")[2)]		$0.9 \cdot 2^{24}$		counts
Full span output (FSO)[3)]		$0.8 \cdot 2^{24}$		counts
without pressure (bidirectional differential)		$0.5 \cdot 2^{24}$		counts
Digital output signal (temperature)[4)]				
@ minimum temperature *T = -25 °C*		$0.\overline{09} \cdot 2^{24}$		counts
@ maximum temperature *T = 85 °C*		$0.\overline{75} \cdot 2^{24}$		counts
Total accuracy[5)] (pressure measurement) @ *T = 25 °C*				
Pressure ranges: ±1.25 mbar, 0 … 2.5 mbar			± 1.5	%FSO
Pressure ranges: ±2.5 mbar, 0 … 5 mbar			± 1.0	%FSO
Pressure ranges: ±5 mbar, 0 … 10mbar and ±10 mbar			± 0.5	%FSO
Pressure ranges: 0 … 20 mbar, ±20 mbar and above			± 0.35	%FSO
TEB/Overall error[6)] (pressure meas.) @ *T = -25 ... 85 °C*				
Pressure ranges: ±1.25 mbar, 0 … 2.5 mbar			± 2.0	%FSO
Pressure ranges: ±2.5 mbar, 0 … 5 mbar			± 1.5	%FSO
Pressure ranges: ±5 mbar, 0 … 10mbar and ±10 mbar			± 1.0	%FSO
Pressure ranges: 0 … 20 mbar, ±20 mbar and above			± 0.5	%FSO
Total error for temperature measurement				
All types of AMS 6835 *T = -25 ... 85 °C*			± 1.0	%FSO
Long-term stability			< 0.5	%FSO/a
Supply voltage (V_S) for 3.3 V models	3.0	3.3	3.6	V
Supply voltage (V_S) for 5 V models	4.5	5.0	5.5	V
Resolution A/D converter for update mode (option -u)		16		bit
Resolution A/D converter for sleep mode (option -s)		18		bit
Output resolution pressure signal for update mode (option -u)		15		bit
Output resolution pressure signal for sleep mode (option -s)		17		bit

© 2026, Analog Microelectronics GmbH

Parameter	Minimum	Typical	Maximum	Units
Output resolution temperature signal		13		bit
Output update rate for update mode (option -u)		1000		Hz
Single measurement time (data request to data ready) for sleep mode (option -s)			4.0	ms
Current consumption active state			3.5	mA
Current consumption in sleep state (option -s)			10	µA
Start-up time to interface communication		3		ms
Compensated temperature range	-25		85	°C
External Capacitance (between V_S and GND)[7)]	0	100		nF
I2C-interface				
Input high level	80		100	% V_S
Input low level	0		20	% V_S
Output low level	0		20	% V_S
Load capacitance @ SDA		100	400	pF
Clock frequency SCL	0.1		3.4	MHz
Pull-up resistor	1	10		kΩ
Pressure cycles (0 to 120 % full scale pressure)	$>10^6$			cycles
Lifetime / MTTF	>10			years
Package	DIP-6 (width: 0.43 inch)			
Weight		1		g
Dimensions without tubes and pins *(L x W x H)*	11 x 7.6 x 7.2			mm
Media compatibility	See "Specification notes" [8), 9)]			

Table 3: **Specifications**

SPECIFICATION NOTES

1) The digital output pressure signal is not ratiometric to the supply voltage.
2) The pressure ranges with specified minimum and maximum pressure are listed in *Table 1*.
3) The Full Span Output (FSO) is the algebraic difference between the output signal at the specified maximum pressure and the output signal at the specified minimum pressure.
4) The digital output temperature signal is not ratiometric to the supply voltage. The temperature value is measured at the sensor's piezoresistive sensing element and is the sensor temperature (including self-heating).
5) Total accuracy is defined as the maximum deviation of the measurement value from the ideal characteristic curve at room temperature (RT) in %FSO including the adjustment errors (offset and span), nonlinearity, pressure hysteresis and repeatability. Nonlinearity is the measured deviation from the best fit straight line (BFSL) across the entire pressure range. Pressure hysteresis is the maximum deviation of the output value at any pressure within the specified range when the pressure is cycled to and from the minimum or maximum rated pressure. Repeatability is the maximum deviation of the output value at any pressure within the specified range after 10 pressure cycles.
6) The TEB (total error band or overall error) is defined as the maximum deviation of the measurement value from the ideal characteristic curve in %FSO across the entire temperature range (-25 ... 85 °C).
7) An external capacitor is recommended.
8) Media compatibility of pressure port 1 (for a description of port 1 see Figure 6): fluids and gases non-corrosive to silicon, Pyrex, RTV silicone rubber, epoxy and LCP.
9) Media compatibility of pressure port 2 (for a description of port 2 see *Figure 6*): clean, dry gases, non-corrosive to LCP, silicon, RTV silicone rubber, epoxy, gold (alkaline or acidic liquids can destroy the sensor).

© 2026, Analog Microelectronics GmbH

FUNCTIONAL DESCRIPTION

The pressure sensors in the AMS 6835 series combine a high quality piezoresistive silicon sensing element with a modern mixed-signal CMOS ASIC for signal-conditioning in a ceramic hybrid package. This combination enables a low total error band, excellent temperature behavior and long-term stability. AMS 6835's functional principle is explained using *Figure 1*.

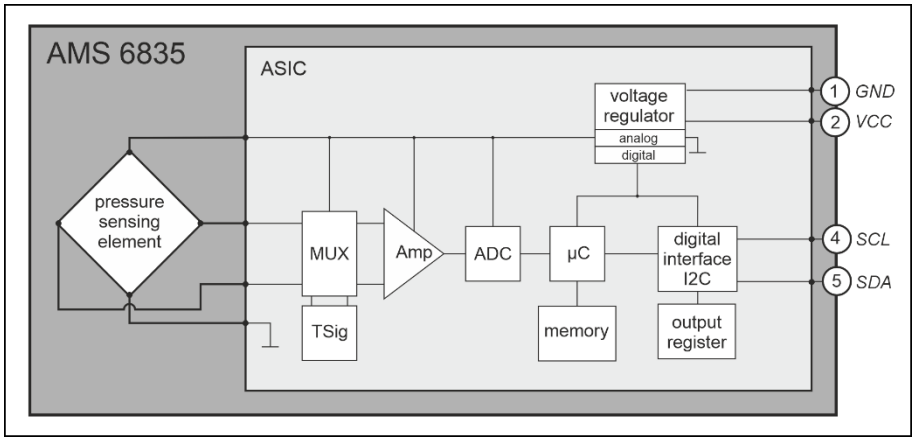

Figure 1: **Functional principle**

Physical pressure applied to AMS 6835's pressure ports is converted to a differential voltage signal by the sensor's pressure sensing element. This pressure related signal is then processed by the internal mixed-signal ASIC, providing a calibrated, temperature compensated pressure measurement value over the I²C bus.

In detail, the signal conditioning is realized in the following way:

At first, the pressure related differential voltage is transmitted through a multiplexer (MUX) and an amplifier (Amp) to the A/D converter block (ADC), where it is converted into a digital value. This digitized pressure raw value is then mathematically processed by the ASIC's integrated microcontroller unit (µC) to obtain a calibrated and temperature compensated output signal. For this purpose, the µC uses a correction algorithm and individual correction coefficients which are stored in the ASIC's memory during the factory calibration process. This permits a sensor specific calibration and correction (i.e. linearization and temperature compensation) of the digitized pressure signal. The temperature signal, which is required for the temperature compensation of the digitized pressure raw value, is generated in the ASIC's temperature reference block (TSig) and transmitted via the multiplexer and the amplifier to the ADC, where it is digitized too. Based on these digitized pressure and temperature raw measurement values and using the stored correction coefficients, the µC calculates the corrected and standardized pressure and temperature output measurement data (24 bit values for pressure and temperature), which are written to the ASIC's output register. The readout of the digital output values for pressure and temperature from the output register can be done via the sensor's digital I2C interface using PIN 4 (SCL) and PIN 5 (SDA).

AMS 6835 can be ordered in two different operating mode configurations: an update mode (option -u) and a sleep mode (option -s). In update mode, AMS 6835 operates with high measurement speed and provides continuously updated measurement values (16 bit ADC resolution). In sleep mode, AMS 6835 operates in an energy-saving mode with a low-current sleep state and 18 bit ADC resolution. Updated measurement values are only provided after a measurement command.

AMS 6835 in update mode runs a cyclic program, which continuously calculates the digital 24 bit output measurement values for pressure and temperature using the current digitized raw values. New output values for pressure and temperature are available every 1 ms and the output register is continuously refreshed.

AMS 6835 in sleep mode enters the sleep state after power up and waits for a measurement command at the I2C interface. Receiving a measurement command, the sensor enters the active mode: the analog blocks are powered up and the measurement cycle is started. As soon as the measurement cycle ($t < 4.0$ ms) is completed, the corrected pressure and temperature data are stored in the ASIC's output register and the sensor returns to sleep state. The measurement values for pressure and temperature can be read from the output register via the sensor's digital I2C interface without waking up the sensor from sleep state.

© 2026, Analog Microelectronics GmbH

INITIAL OPERATION

Electrical Connection

For all types of AMS 6835 the electrical connection is typically established by soldering them directly on a printed circuit board or by mounting them on a suitable socket.[1)]

The basic electronic circuit for an AMS 6835 sensor is shown in *Figure 2*. It is sufficient to connect PIN 1 (GND), PIN 2 (VCC) and the I2C-bus lines to PIN 4 (SCL) and PIN 5 (SDA).

Important: The SDA and SCL lines have to be connected to the positive supply voltage (pin VCC) via a pull-up resistor. Please add pull-up resistors (10 kΩ are recommended) to your bus line, if they are not integrated in the I2C-master.

An external capacitor, e.g. 100 nF, is recommended between VCC and GND to reduce noise and stabilize the supply voltage.

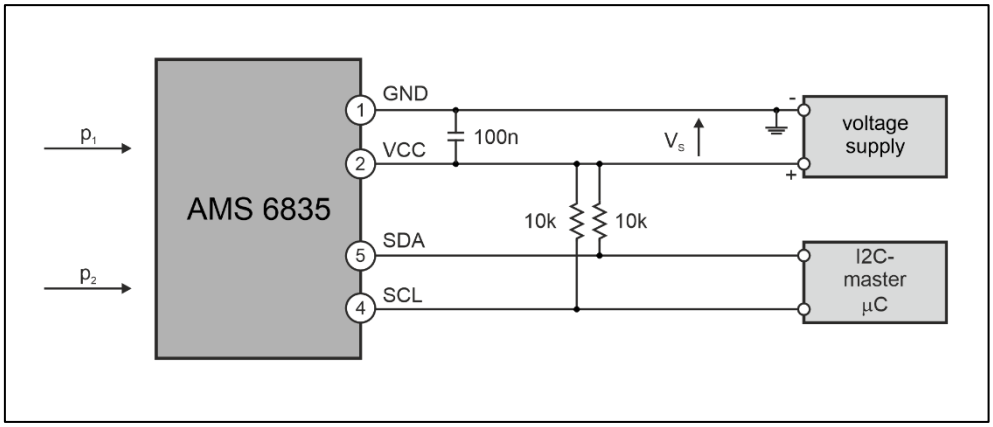

Figure 2: **Principle electric circuitry**

Pressure Connection

The pressure connection is established using suitable tubing[2)] attached to AMS 6835's pressure ports. Depending on the sensor type and the type of measuring pressure, one or two of the pressure ports have to be connected to the measuring medium / volume, as described in the table below:

Sensor type	Pressure type to measure	Port 1	Port 2	Requirement
AMS 6835-xxxx-D	differential ($\Delta p = p_1 - p_2$)	connected to p_1	connected to p_2	$p_1 \geq p_2$
	positive gage	connected to p_1	open	$p_1 \geq p_{ambient}$
	negative gage (vacuum)	open	connected to p_2	$p_2 \leq p_{ambient}$
AMS 6835-xxxx-D-B	bidirectional differential ($\pm\Delta p$)	connected to p_1	connected to p_2	$p_1 \geq p_2$ or $p_1 \leq p_2$
AMS 6835-xxxx-A	absolute	n.a. (open)	connected to p_2	p_2 = meas. pressure
AMS 6835-xxxx-B	absolute (barometric)	n.a. (open)	connected to p_2	p_2 = meas. pressure

with p_1 = pressure connected to pressure port 1 and p_2 = pressure connected to pressure port 2. For port declaration see *Figure 6*.

The media compatibility of pressure ports 1 and 2 can be found in "Specification notes", 8) and 9).

Notes:

1) ESD precautions are necessary. It is essential to ground machines and personnel properly during assembly and handling of the device.

2) For horizontal pressure port configuration Analog Microelectronics GmbH recommends silicone tubing with inner diameter Ø = 1.6 mm, outer diameter Ø = 3.2 mm.

© 2026, Analog Microelectronics GmbH

I2C INTERFACE

AMS 6835 feature a digital I2C interface. The fundamentals of standard I2C communication are illustrated in *Figure 3*.

To establish the I2C-bus only two bus lines are necessary: a serial data line (SDA) and a serial clock line (SCL). SDA and SCL are bidirectional lines connected to the positive supply voltage via pull-up resistors (see *Figure 2*).

Communication via the I2C-bus follows a simple master-slave principle. The data transfer is always initialized by the master (e.g. a microcontroller), which sends a data request command to the sensor AMS 6835. The sensor – which always operates as slave – responds then.

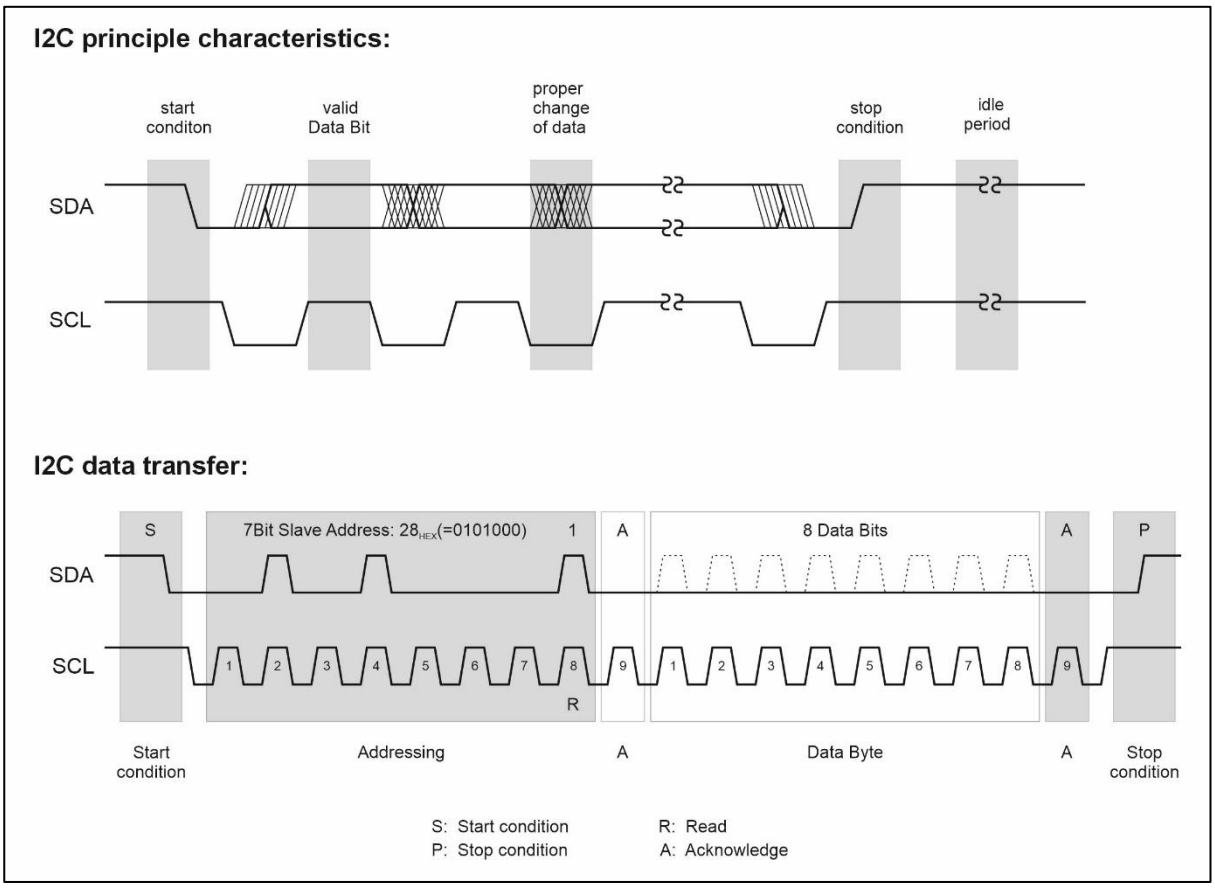

***Figure 3*: Standard I2C protocol**

The typical I2C communication phases on the two bus lines are as follows:

Idle period (bus is free)
When the bus is free, both I2C-bus lines (SDA and SCL) are pulled up to supply voltage level.

Start S (start condition)
Prior to any data transfer on the bus, a start condition has to be generated. The start condition is always sent by the I2C master. The start condition is defined as a transition from high-level voltage to low-level voltage on the SDA line, while the SCL line is still on high-level voltage.

© 2026, Analog Microelectronics GmbH

Stop P (stop condition)
The stop condition is always generated by the I2C master after a data transfer has been completed. The stop condition is defined as a transition from low-level to high-level voltage on the SDA line while the SCL line is still on high-level voltage. The I2C communication with AMS 6835 is always terminated by a stop condition.

Valid data
Data is transmitted in bytes (1 byte = 8 bit), starting with the most significant bit. Each data bit is transmitted at the related clock pulse generated by the I2C master. The transmitted bits are only valid if, following a start condition, the level on the SDA line is constant as long as the SCL line is on high-level voltage. Changes to the SDA level must be made while the SCL line is on low-level voltage.

Acknowledge A / Not Acknowledge N
After a byte has been transmitted, the respective receiver (I2C master or sensor) has to send an acknowledge (additional acknowledge bit) confirming the correct receipt of the data. For this purpose, the I2C master generates an extra acknowledge-related clock pulse. The receiver sends the acknowledge bit by pulling the SDA line down to low-level voltage during the additional clock pulse. If the SDA line remains at high-level voltage during the acknowledge-related clock pulse, it is interpreted as not acknowledge.

Addressing the slave (I2C-address AMS 6835)
After the start condition, the I2C master sends an addressing byte to initiate the communication with a specific sensor. The addressing byte contains the individual 7-bit address of the selected slave (sensor AMS 6835) and additionally a data direction bit (R/W). A "0" for the R/W bit indicates a transmission from the master to the slave (W: write; the master wants to transmit data to the selected slave), a "1" indicates a data request (R: read; the master requests data from the slave).

The pressure sensors of the AMS 6835 series have a factory-programmed 7-bit address of $0x28_{Hex}$ (0101000_{bin}), which is stored in the sensor's memory. On request, each AMS 6835 can be ordered with an individual 7-bit address programmed at the factory.

In general, 7-bit addressing allows 128 different addresses. If more than one slave is connected to the same I2C bus, each slave requires an individual I2C address. Since AMS 6835 uses the addresses $0x04_{Hex}$ to $0x07_{Hex}$ internally, they are not available as I2C address. Thus, 124 different addresses for AMS 6835 remain for the user's purpose.

Using the AMS 6835 USB Starter Kit, the factory programmed I2C address can be changed by the user himself.

Notes:

There are three differences between AMS 6835's communication protocol and the original I2C communication protocol:

1) A stop condition directly after a start condition without clock pulses in between is not allowed. This creates a communication error for the next communication.
2) A second start condition (restart) during data transmission when SCL is still high is not allowed.
3) Between the start condition and the first rising SCL edge, a falling SDA edge is not allowed.

© 2026, Analog Microelectronics GmbH

MEASUREMENT DATA READOUT FOR AMS 6835 IN UPDATE MODE

In update mode (configuration option -u) AMS 6835 operates in a cyclic mode and automatically refreshes the pressure and temperature measurement values with a typical update rate of 1 ms. The digital output measurement values for pressure and temperature can be read from AMS 6835's output register via the I2C-interface with 24 bit length.

The I2C communication for the data read out is illustrated in *Figure 4*.

To initiate the data readout, the I2C master (controller, typically a microcontroller) generates a start condition and sends the addressing byte containing the 7-bit I2C address of the selected sensor (AMS 6835's standard address is $0x28_{Hex}$) followed by the data direction bit (R = '1'). The sensor answers with an acknowledge bit during the acknowledge-related clock pulse and starts to send the data stored in its output register to the controller.

For a complete pressure and temperature measurement, 7 bytes are transmitted. The first byte contains the sensor's status (for interpretation see section DATA INTERPRETATION), the next three bytes contain the sensor's current 24 bit digital pressure measurement value, and the last three bytes the 24 bit digital temperature measurement value. The measurement data always start with the most significant byte (MSB) and each byte begins with the most significant bit. On each transferred data byte, the controller sends an acknowledge bit, which confirms the correct receipt of the data. After the seventh byte, the controller stops the readout by sending a not-acknowledge bit and a stop condition.

If less than the full seven data bytes are required, the controller can stop the data transfer after every complete byte by sending a not-acknowledge bit and a stop condition. For example, this allows to read the status byte only (stop after 1 byte) or to stop the readout after the most significant 16 bit of the pressure measurement data (stop after three bytes: one for the status byte and two for the most relevant 16 bit measurement data).

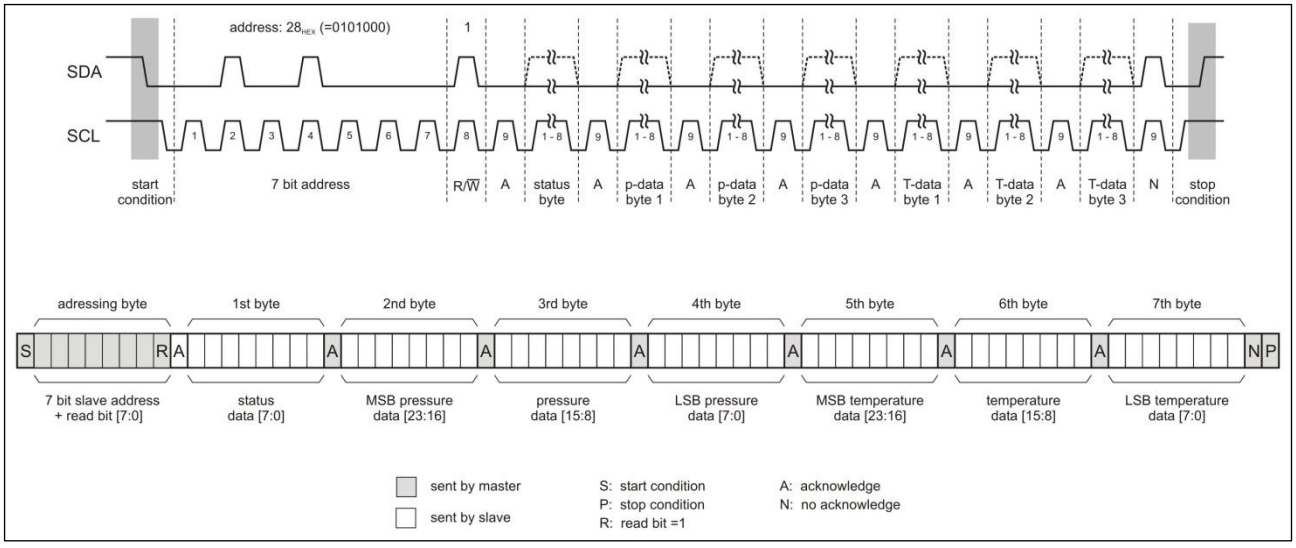

Figure 4: **I2C data readout of the complete measurement data of 7 bytes in update mode (option -u)**

© 2026, Analog Microelectronics GmbH

MEASUREMENT DATA READOUT FOR AMS 6835 IN SLEEP MODE

The measurement data readout for AMS 6835 in sleep mode (configuration option -s) is shown in *Figure* 5.

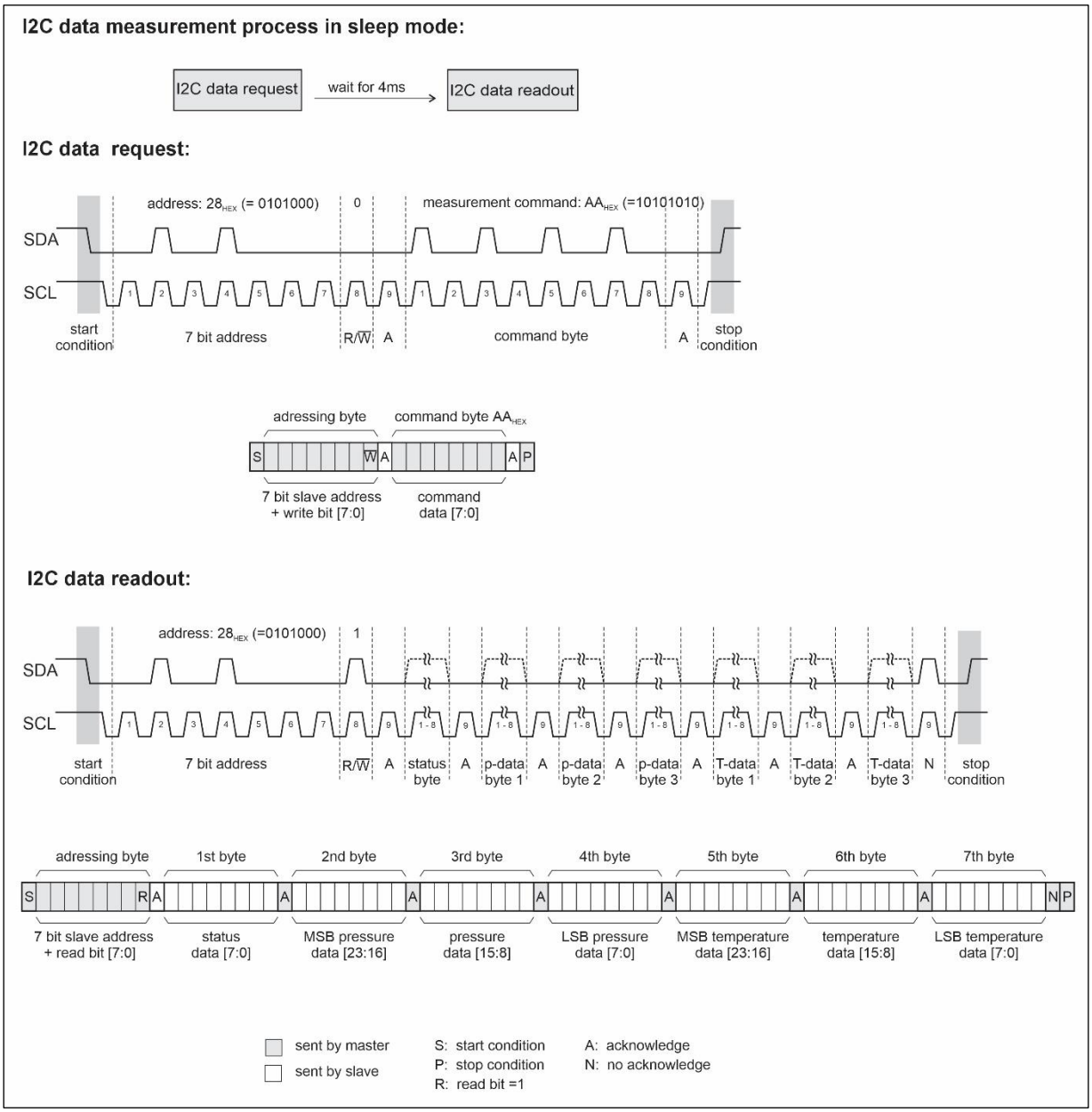

After powering up, an AMS 6835 in sleep mode enters sleep state and waits for a measurement command. To start a single measurement, an I2C data request command has to be sent from the master to the sensor. For this purpose, the master initiates the data transfer on the I2C bus lines with a start condition, followed by the I2C address of the sensor (The 7-bit address of the AMS 6835 is programmed to $0x28_{Hex} = 0101000_{bin}$ at the factory) and a write bit (R = ”0”). The sensor answers to his address with an acknowledge bit. Then the master sends the command $0xAA_{Hex}$, which is also confirmed by the sensor with an acknowledge bit. The master finishes the I2C data request command with a stop condition. As soon as AMS 6835 has received the complete command, the sensor enters the active state and a single measurement is processed. The complete measurement cycle takes < 4.0 ms. Afterwards, the sensor returns to sleep state and the I2C master (controller) can read the data from the sensor’s output register.

© 2026, Analog Microelectronics GmbH

To initiate the data readout, the I2C master generates a start condition and sends the sensor's 7-bit I2C address followed by the read bit (R = "1"). Again, the sensor answers with an acknowledge bit during the acknowledge-related clock pulse and starts to send the data stored in its output register to the master. For a complete pressure and temperature measurement data readout, 7 bytes have to be transmitted. The first byte contains the sensor's status (for interpretation see section DATA INTERPRETATION), the next three bytes the sensor's 24 bit digital pressure measurement value and the last three bytes the 24 bit digital temperature measurement value. The measurement data always start with the most significant byte and each byte begins with the most significant bit. On each transferred data byte, the controller sends an acknowledge bit, which confirms the correct receipt of the data. After the seventh byte, the controller stops the readout by sending a not-acknowledge bit and a stop condition.

If less than the complete seven data bytes are required, the controller can stop the data transfer after every complete byte by sending a not-acknowledge bit (instead of the acknowledge bit) and a stop condition. For example, this allows to read the status byte only (stop after 1 byte) or to stop the readout after the pressure measurement data (stop after four bytes).

DATA INTERPRETATION

Status byte

The status byte contains essential information about AMS 6835's state. It is always sent by the sensor as the first data byte in a data read process and contains the following information, also shown in *Table 4:*

Status bit [7:6]:

always [0 1]

Status bit 5 – sensor busy:

[1] for AMS 6835 in update mode configuration, the sensor data is continuously renewed

[0] or [1] for AMS 6835 in sleep mode configuration, [0] in sleep state, [1] if sensor is processing data

Status bit [4:3] – sensor operation mode:

[0 1] for update mode or [1 0] for sleep mode

Status bit 2 – memory check:

During power-up the AMS 6835 performs a memory check. If the check is completed without errors, the bit is "0". If it is "1", it indicates an uncontrolled change of a memory register and the sensor might not work properly.

Status bit 1:

always [0]

Status bit 0 – overflow indication:

This bit indicates a signal overflow. It is "0", if the sensor data is valid. If it is "1", the applied pressure exceeds the sensor's pressure range.

status bit	7	6	5	4	3	2	1	0
meaning	-	-	busy	Mode setting		0, if memory check was passed	-	0, if sensor is not in overflow
Default: in update mode (-u)	0	1	1	0	1	0	0	0
Default: in sleep mode (-s)	0	1	0	1	0	0	0	0

***Table 4*: AMS 6835's status byte**

Calculating the measured values for digital pressure and temperature in physical units

The digital pressure value is given by the bytes 2, 3 and 4, with byte 2 being the most significant byte and byte 4 the least significant one. In the same way, the temperature value consists of the bytes 5, 6 and 7. In order to generate the desired information on pressure and temperature, the digital output values have to be converted into physical units.

The current pressure in the desired physical unit (e.g. mbar) is calculated from the digital pressure value using the following equations:

$$\boldsymbol{p} = \frac{\boldsymbol{Digoutp(p) - Digoutp_{min}}}{\boldsymbol{Sensp}} + \boldsymbol{p_{min}} \qquad \text{with} \qquad \boldsymbol{Sensp} = \frac{\boldsymbol{Digoutp_{max} - Digoutp_{min}}}{\boldsymbol{p_{max} - p_{min}}} \tag{1}$$

wherein

p is the current pressure in the desired physical unit (e.g. mbar, Pa),

$\boldsymbol{p_{min}}$ and $\boldsymbol{p_{max}}$ are the specified minimum and maximum pressure values in the desired physical unit (e.g. in mbar) depending on the sensor's specific pressure range (see *Table 1*)

Digoutp(p) is the current digital 24 bit pressure measurement value in counts,

$\boldsymbol{Digoutp_{min}}$ is the digital pressure measurement value at the minimum specified pressure in counts,

$\boldsymbol{Digoutp_{max}}$ is the digital pressure measurement value at the maximum specified pressure in counts,

Sensp is the sensitivity of the pressure sensor (e.g. in counts/mbar, counts/Pa).

The current sensor temperature in °C is calculated from the digital temperature output value using the following equation:

$$\boldsymbol{T} = \frac{(\boldsymbol{DigoutT(T)} \cdot 165)}{2^{24}} - 40 \tag{2}$$

Therein ***T*** is the current sensor temperature in °C and ***DigoutT(T)*** is the current 24 bit digital temperature output value in counts.

Example

At the digital output of an AMS 6835-0005-D-B-H-5-s (sleep mode) (-5 … 5 mbar bidirectional differential sensor) the following data bytes 1 … 7 are read:

Byte 1: $0x50_{Hex}$ Byte 2: $0xB9_{Hex}$ Byte 3: $0x12_{Hex}$ Byte 4: $0xD4_{Hex}$ Byte 5: $0x62_{Hex}$ Byte 6: $0xAA_{Hex}$
Byte 7: $0x33_{Hex}$

Byte 1 is the status byte and not necessary for the calculation

Taking bytes 2, 3 and 4 the current 24 bit digital pressure value is:

Digoutp(p) = B9 12 $D4_{Hex}$ counts = 12128980_{Dec} counts

and with byte 5, 6 and 7 the digital temperature value is:

DigoutT(T) = 62 AA 33_{Hex} counts = 6466099_{Dec} counts

For AMS 6835-0005-D-B the following values are specified:

$\boldsymbol{p_{min}}$ = -5 mbar, $\boldsymbol{p_{max}}$ = 5 mbar and $\boldsymbol{Digoutp_{min}} = 0.1 \cdot 2^{24}$, $\boldsymbol{Digoutp_{max}} = 0.9 \cdot 2^{24}$

Using these values and equation (1) the current pressure in mbar can be calculated:

$$\boldsymbol{p} = \frac{(12128980 - 0.1 \cdot 2^{24})\ \text{counts}}{(0.8 \cdot 2^{24} / 10)\ \text{counts / mbar}} + (-5)\ \text{mbar} = 2.787\ \text{mbar}$$

Using equation (2), the current sensor temperature in °C is calculated as:

$$\boldsymbol{T} = \frac{(6466099 \cdot 165)\ \text{counts}\cdot°\text{C}}{2^{24}\ \text{counts}} - 40\ °\text{C} = 23.6\ °\text{C}$$

Note: Under normal conditions (no error), byte 1 is $0x50_{Hex}$ in sleep mode and $0x68_{Hex}$ in update mode.

© 2026, Analog Microelectronics GmbH

DIMENSIONS AND PINOUT

AMS 6835 pressure sensors come in an ultra-miniaturized dual-in-line package (DIP-06) for assembly on printed circuit boards (PCB).

The pinout and the dimensions of AMS 6835's ceramic hybrid package with horizontal barbed pressure ports is illustrated in *Figure 6.*

Important: PIN 6 is reserved for use during the manufacturing process and must remain electrically unconnected.

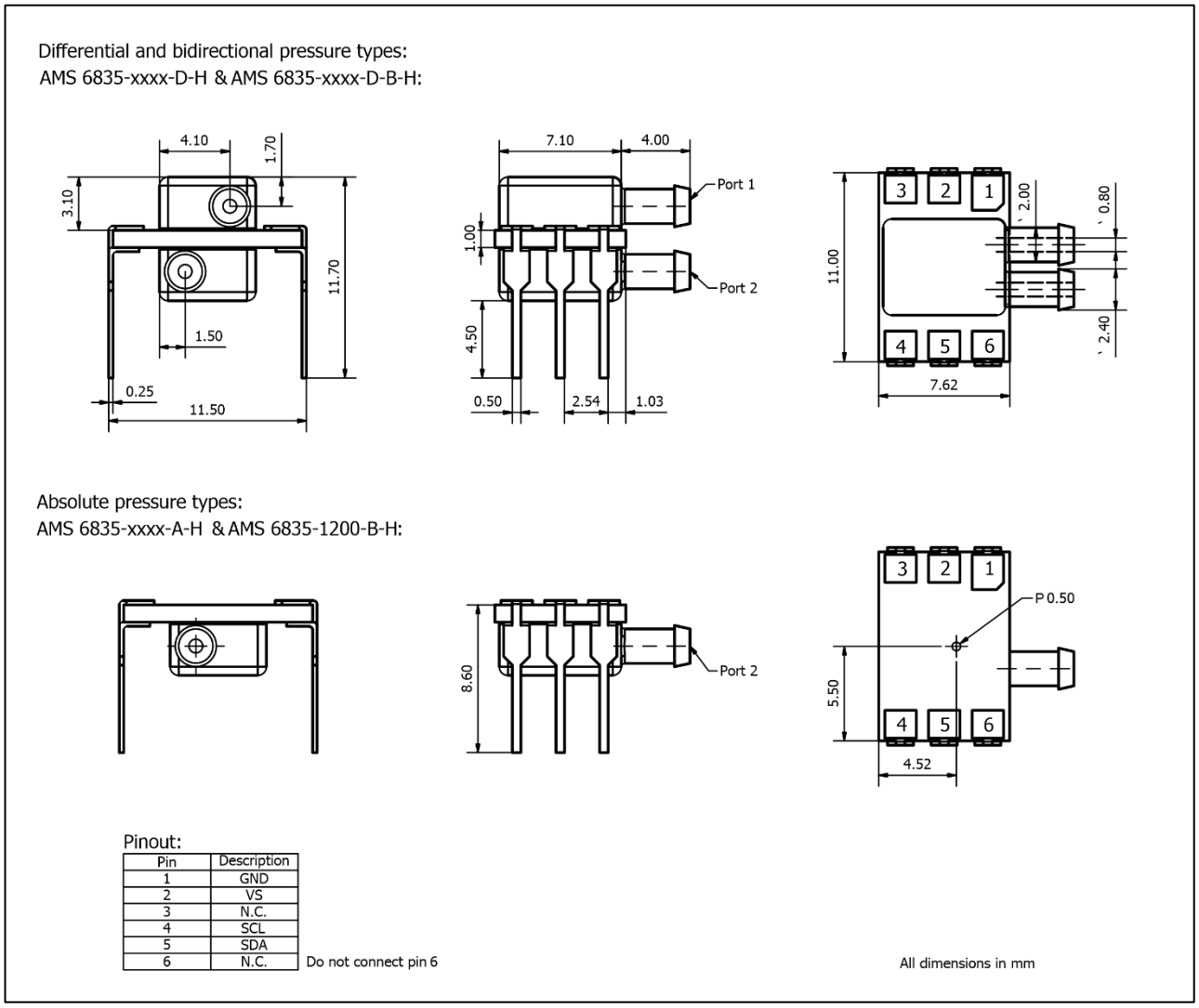

***Figure 6*: Dimensions and pinout of AMS 6835´s standard package**

INFORMATION FOR ORDERING

Horizontal pressure port configuration (DIL package)

With x = 3 for 3.3 V supply voltage models and x = 5 for 5 V supply voltage models.
With y = u for update mode configuration and y = s for sleep mode configuration.

Ordering Code	mbar	kPa	psi
Differential pressure types (-D)			
AMS 6835-0002-D-H-x-y-DIL	0 … 2.5	0 … 0.25	0 … 0.0363
AMS 6835-0005-D-H-x-y-DIL	0 … 5	0 … 0.5	0 … 0.0725
AMS 6835-0010-D-H-x-y-DIL	0 … 10	0 … 1	0 … 0.145
AMS 6835-0012-D-H-x-y-DIL	0 … 12.5	0 … 1.25	0 … 0.181
AMS 6835-0020-D-H-x-y-DIL	0 … 20	0 … 2	0 … 0.290
AMS 6835-0035-D-H-x-y-DIL	0 … 35	0 … 3.5	0 … 0.507
AMS 6835-0050-D-H-x-y-DIL	0 … 50	0 … 5	0 … 0.725
AMS 6835-0100-D-H-x-y-DIL	0 … 100	0 … 10	0 … 1.450
AMS 6835-0200-D-H-x-y-DIL	0 … 200	0 … 20	0 … 2.901
AMS 6835-0350-D-H-x-y-DIL	0 … 350	0 … 35	0 … 5.076
AMS 6835-0500-D-H-x-y-DIL	0 … 500	0 … 50	0 … 7.252
AMS 6835-1000-D-H-x-y-DIL	0 … 1000	0 … 100	0 … 14.50
AMS 6835-1500-D-H-x-y-DIL	0 … 1500	0 … 150	0 … 21.76
AMS 6835-2000-D-H-x-y-DIL	0 … 2000	0 … 200	0 … 29.01
Bidirectional differential pressure types (-D-B)			
AMS 6835-0001-D-B-H-x-y-DIL	-1.25 … +1.25	-0.125 … +0.125	-0.0181… +0.0181
AMS 6835-0002-D-B-H-x-y-DIL	-2.5 … +2.5	-0.25 … +0.25	-0.0363 … +0.0363
AMS 6835-0005-D-B-H-x-y-DIL	-5 … +5	-0.5 … +0.5	-0.0725 … +0.0725
AMS 6835-0010-D-B-H-x-y-DIL	-10 … +10	-1 … +1	-0.145 … +0.145
AMS 6835-0012-D-B-H-x-y-DIL	-12.5 … +12.5	-1.25 … +1.25	-0.181 … +0.181
AMS 6835-0020-D-B-H-x-y-DIL	-20 … +20	-2 … +2	-0.290 … +0.290
AMS 6835-0035-D-B-H-x-y-DIL	-35 … +35	-3.5 … +3.5	-0.507 … +0.507
AMS 6835-0050-D-B-H-x-y-DIL	-50 … +50	-5 … +5	-0.725 … +0.725
AMS 6835-0100-D-B-H-x-y-DIL	-100 … +100	-10 … +10	-1.450 … +1.450
AMS 6835-0200-D-B-H-x-y-DIL	-200 … +200	-20 … +20	-2.901 … +2.901
AMS 6835-0350-D-B-H-x-y-DIL	-350 … +350	-35 … +35	-5.076 … +5.076
AMS 6835-0500-D-B-H-x-y-DIL	-500 … +500	-50 … +50	-7.252 … +7.252
AMS 6835-1000-D-B-H-x-y-DIL	-1000 … +1000	-100 … +100	-14.50 … +14.50
Absolute pressure types (-A)			
AMS 6835-0500-A-H-x-y-DIL	0 … 500	0 … 50	0 … 7.250
AMS 6835-1000-A-H-x-y-DIL	0 … 1000	0 … 100	0 … 14.50
AMS 6835-1500-A-H-x-y-DIL	0 … 1500	0 … 150	0 … 21.756
AMS 6835-2000-A-H-x-y-DIL	0 … 2000	0 … 200	0 … 29.01
Barometric (absolute) pressure types (-B)			
AMS 6835-1200-B-H-x-y-DIL	700 … 1200	70 … 120	10.88 … 17.40

© 2026, Analog Microelectronics GmbH

ADDITIONAL EQUIPMENT

	Description
USB starter kit AMS 6835	A USB starter kit interfacing AMS 6835 to a Windows PC (Windows 10 or 11) via a USB port. It consists of two PCBs and software. The kit can be used for quick and easy evaluation of AMS 6835, data readout, data logging and to change AMS 6835's I2C address.

Analog Microelectronics GmbH
An der Fahrt 13
55124 Mainz
Germany

Phone: +49 (0) 6131/91 073-0
Fax: +49 (0) 6131/91 073-30
Internet: www.analog-micro.com
E-Mail: info@analogmicro.de

Analog Microelectronics GmbH reserves the right to amend any dimensions, technical data or other information contained herein without prior notification.